11	12	13	14	15	16	17	18
K1-15170	K1-15150	K1-15140	K1-15160	K1-10011	2 x K3-01006 *M4x40*	2 x K3-03044 *M4*	8 x K3-06002 *Ø4x25*

19
2 x K3-06011 *Ø4x12*

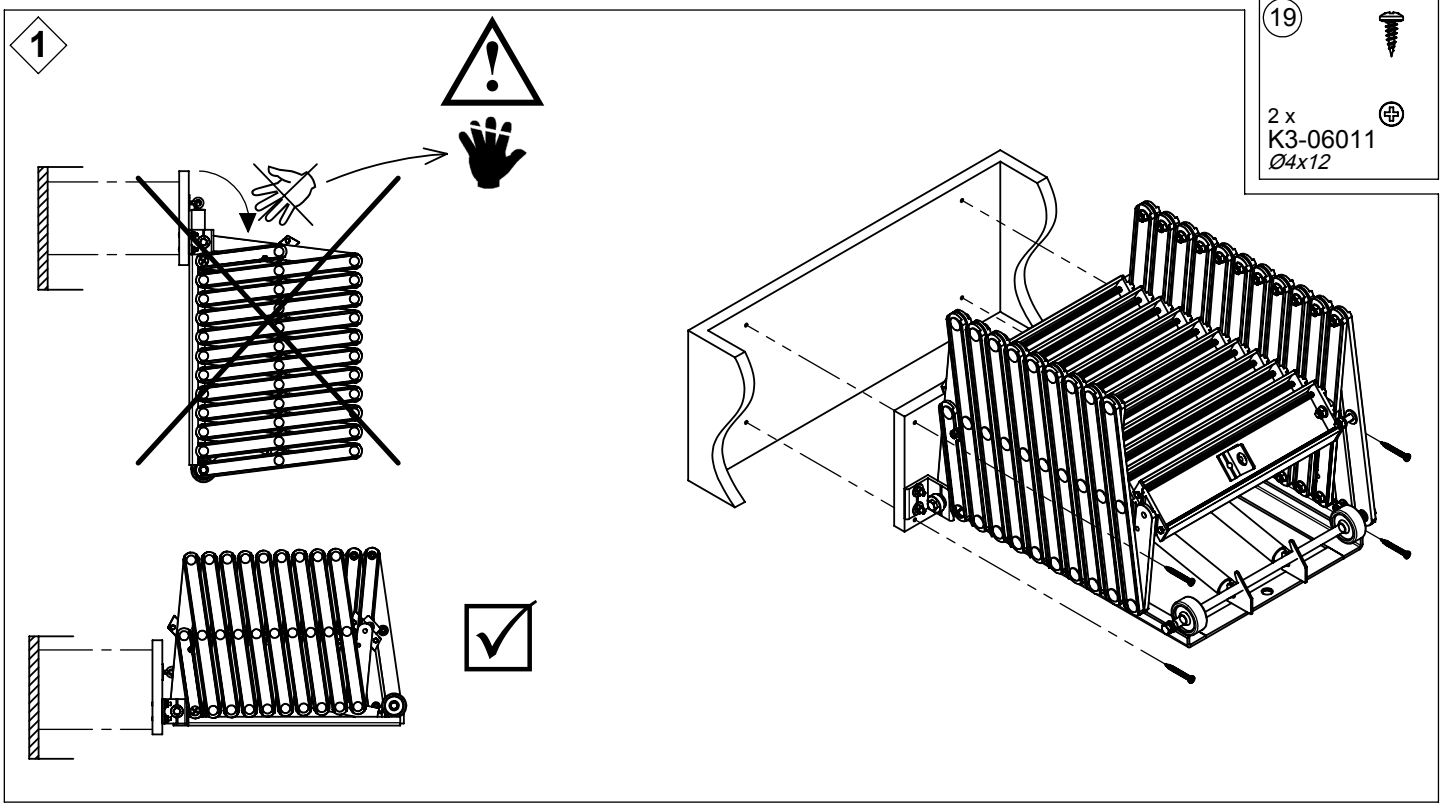

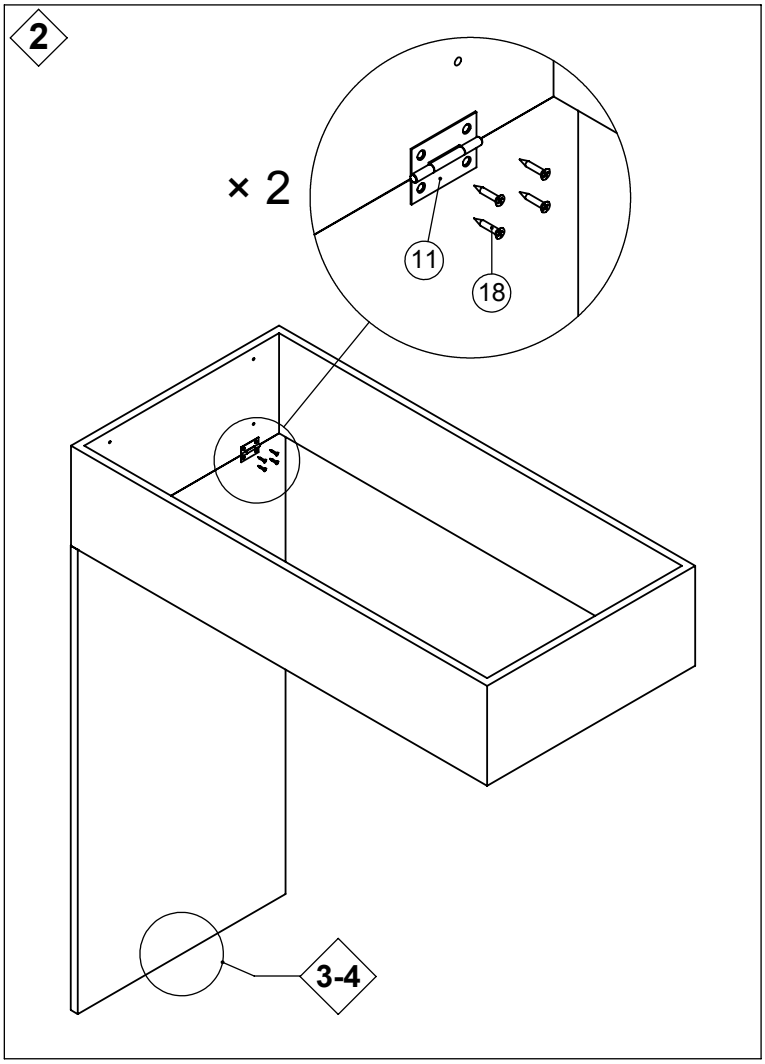

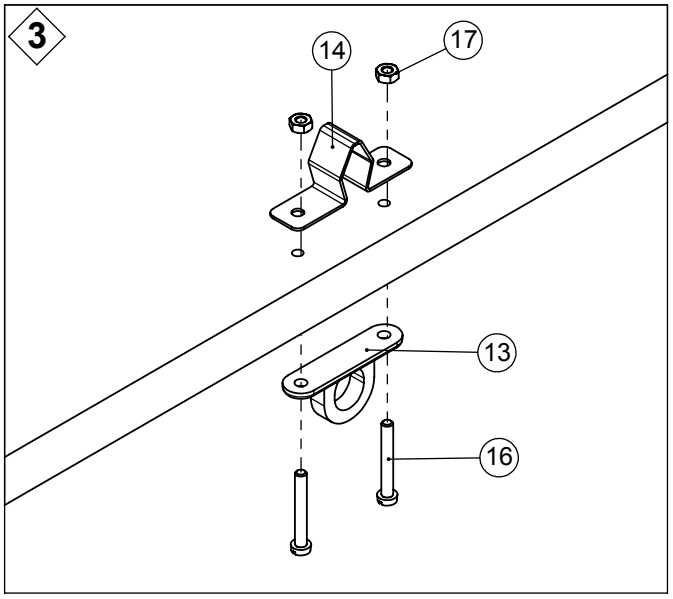

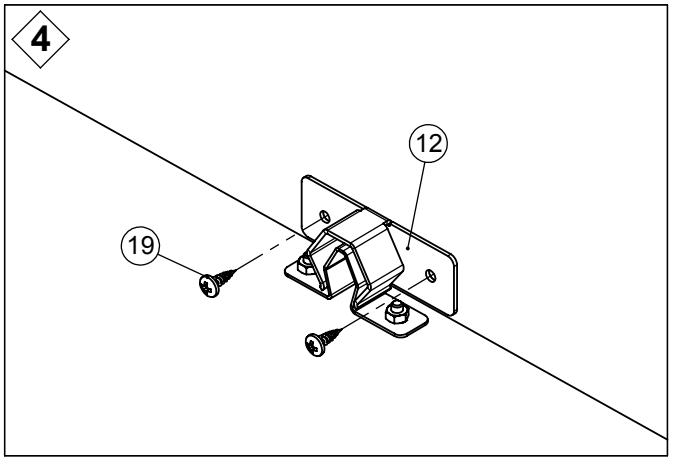

R1-99410-01 / 26-06-2009 / Rev. 22-11-2012

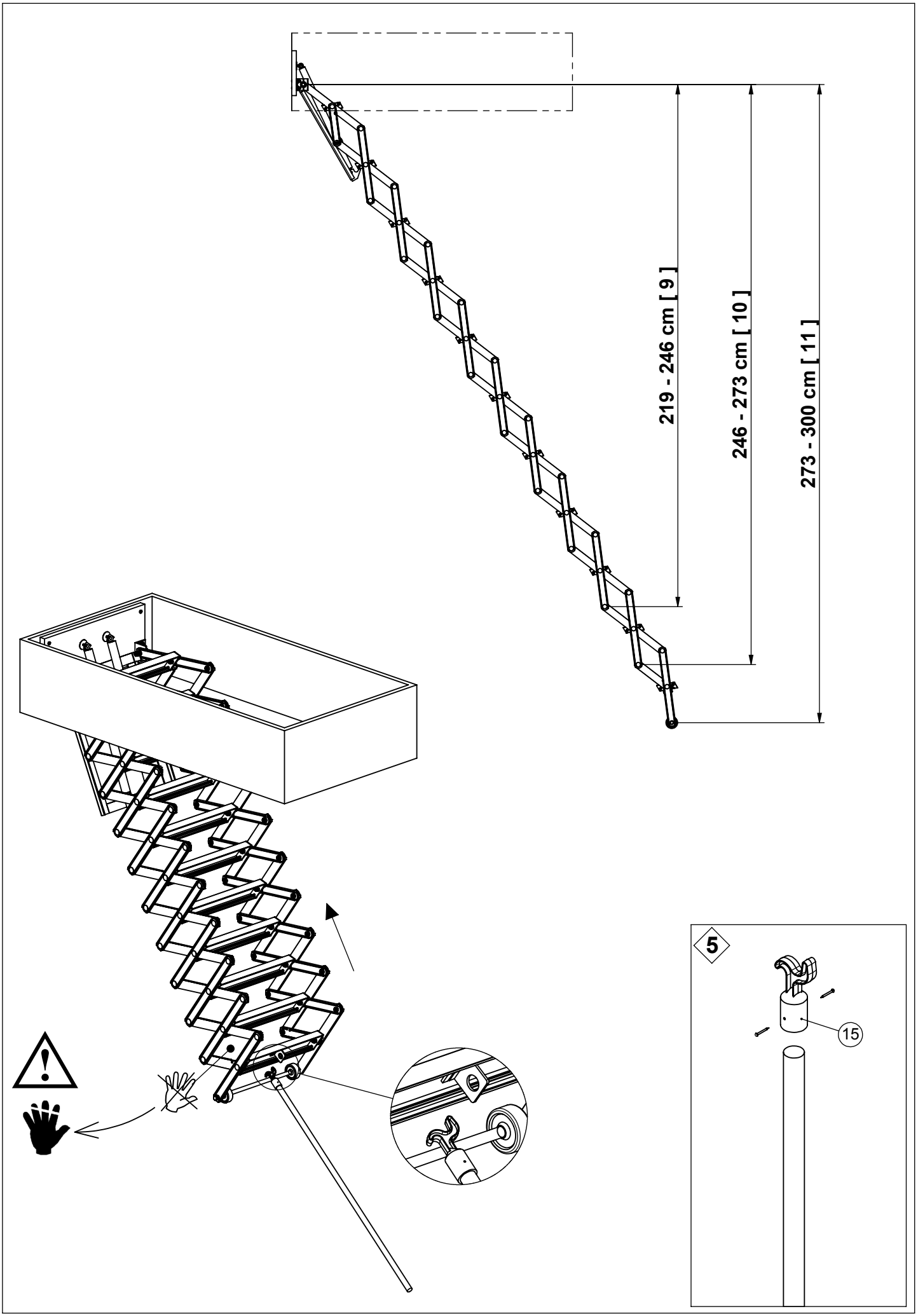
219 - 246 cm [9]
246 - 273 cm [10]
273 - 300 cm [11]
5
15